符合"DLK环境管理物质技术标准"

工程变更通知单 ECN(DCN) NO.	版本 REV	日期 DATE	说明 DESCRIPTION	改变 CHANGE	承认 APPRO.
KSECN11086	B	05/26 11'	变更图框	Lijian	CW.Yan
KSECN12005	C	2/20 12'	加胶限位	Guozhen	CW.Yan
KSECN12042	D	6/27 12'	头部封胶	Guozhen	CW.Yan
KSECN16008	E	20160329	产品结构由组装式改为Molding式	陈浩泽	王永辉

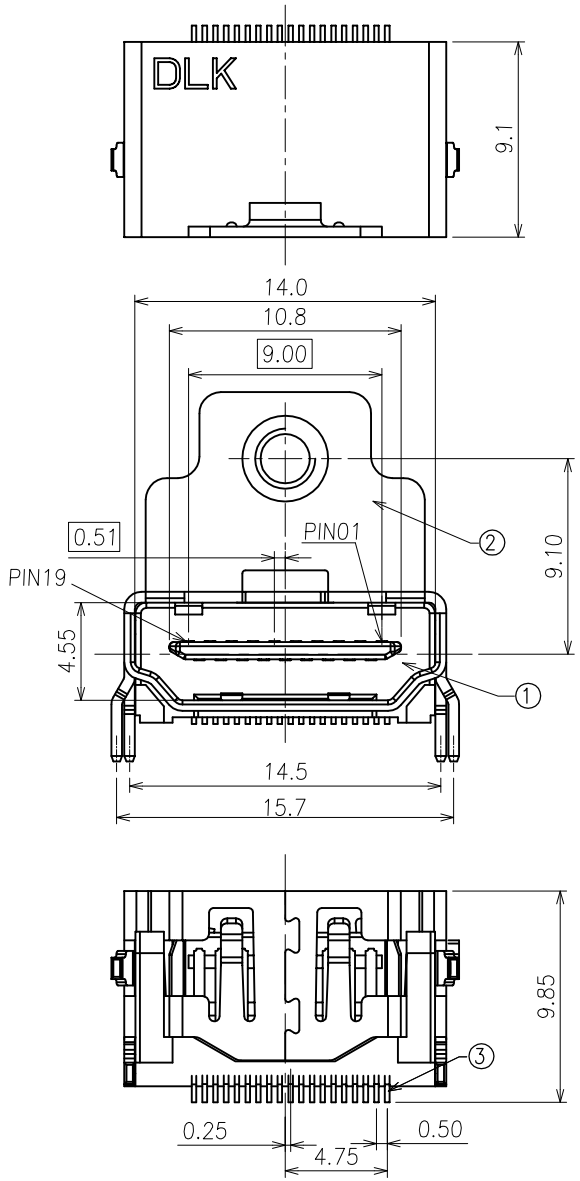

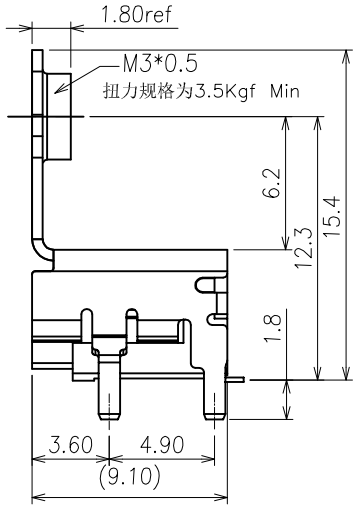

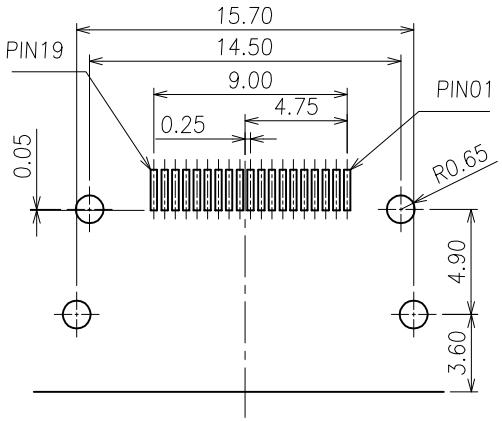

PCB LAYOUT(TOP VIEW)

HDM2H A-19 B ** * ** 0
① ② ③ ④ ⑤ ⑥ ⑦

① PRODUTION CODE（产品编码）:
HDM2H: HDMI SERIES
② CHARACTER（特征）:
A:180° SMT TYPE
③ POSITION（位数）:
19:19PIN
④ COLOR OF HOUSING(本体颜色）:
B:BLACK COLOR
⑤ PLATING OF CONTACT(端子电镀）:
M1 :GOLD FLASH AND MATTE TIN PLATD
M2 :Au 5U" AND MATTE TIN 100U" PLATD
M3 :Au 10U" AND MATTE TIN 100U" PLATD
M4 :Au 15U" AND MATTE TIN 100U" PLATD
M5 :Au 30U" AND MATTE TIN 100U" PLATD
G1 :接触区刷金10u"，浸镀全金3u"
⑥ PACKAGE(包装）:
Y :TRAY PACKAGE
R :TAPE&REEL PACKAGE
⑦ PLATING OF SHELL(铁壳电镀）:
N1:NI PLATD
L1 :雾锡PLATD

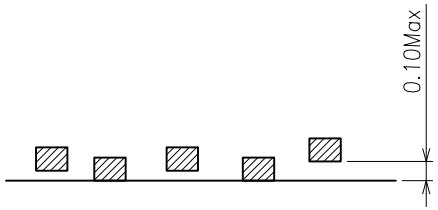

端子平整度要求

NO.	ITEM	Q'TY	DESCRIPTION	FINISH
3	CONTACT	19	COPPER AlloY	PLATED Au
2	SHELL	1	COPPER AlloY	PLATED Ni
1	HOUSING	1	THERMOPLASTIC	UL94V-0,Black

GENERAL TOLERANCE UNLESS OTHERWISE NOTED	
Angle	±1°
X.	±0.30
.X	±0.25
.XX	±0.15
.XXX	±0.10
A4	

德力康电子科技有限公司
DELIKANG ELECTRONICS TECHNOLOGY CO.,LTD

C	名称 TITLE:	HDMI 19PIN REC. CONN.			
档案名称 FILE NAME.	C-HDM2H-00-00		料号 PART NO:	HDM2HA-19B*****0	
DRAWING	Lijian	CHECKED	——	APPROVED	CW.Yan
UNIT:	mm	SCALE	1:1	SHEET: 1 of 1	