符合"DLK环境管理物质技术标准"

符合USB3.0协会规范标准"

工程变更通知单 ECN(DCN) NO.	版本 REV	日期 DATE	说明 DESCRIPTION	变更 CHANGE	核准 APPRO.
————	X0	20190320	NEW RELEASE	——	——

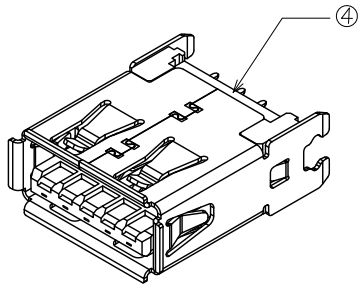

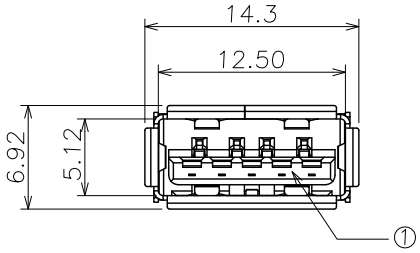

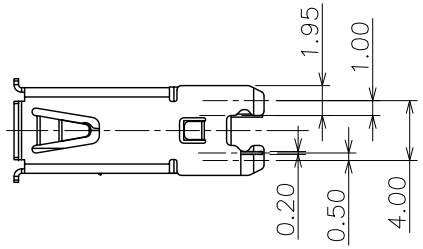

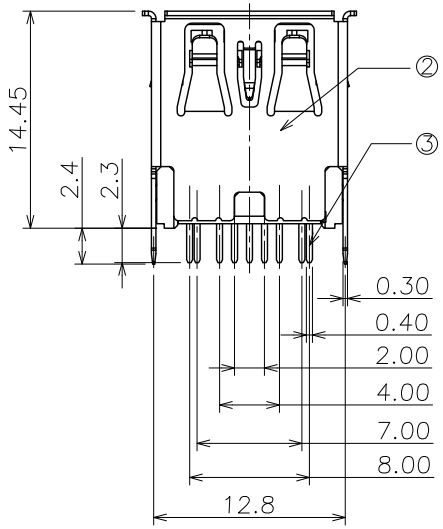

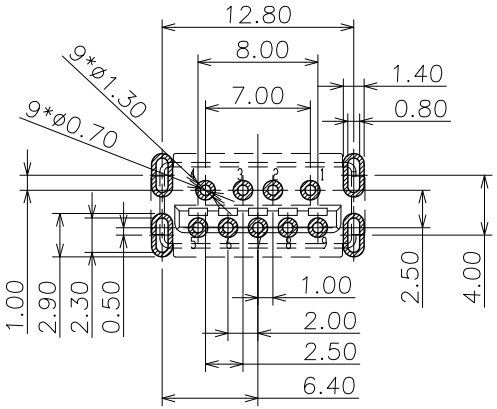

PCB LAYOUT(T1.0~1.6)TOP VIEW

U3A27 C-09 L M1 Y N2 4

① ② ③ ④ ⑤ ⑥ ⑦

① PRODUTION CODE（产品编码）:
U3A27: USB 3.0 AF 180°

② CHARACTER（特征）:
C:DIP TYPE

③ POSITION（位数）:
09: 09PIN

④ COLOR OF HOUSING(本体颜色）:
L:BLUE

⑤ PLATING OF CONTACT(端子电镀）:
M1: G/F PLATED ON THE FUNCTIONAL AREA OF CONTACT.

⑥ PACKAGE(包装）:
Y :TRAY PACKAGE

⑦ PLATING OF SHELL(铁壳电镀）:
N2 :Ni plated

NO.	ITEM	Q'TY	DESCRIPTION	FINISH
4	COVER	1	LCP	UL94V-0
3	CONTACT	9	C5191	Au PLATED
2	SHELL	1	SUS430	Ni PLATED
1	HOUSING	1	LCP	UL94V-0

GENERAL TOLERANCE UNLESS OTHERWISE NOTED	
Angle	±2°
X.	±0.38
.X	±0.25
.XX	±0.20
.XXX	±0.15
A4	

德力康电子科技有限公司

DLK DELIKANG ELECTRONICS TECHNOLOGY CO.,LTD

C	名称 TITLE:	USB 3.0 A/F V/T 14.45H STD.			
档案名称 FILE NAME.	C-U3A27-04-00		料号 PART NO:	U3A27C-09LM1YN24	
DRAWING	覃智森	CHECKED		APPROVED	
UNIT:	mm	SCALE	1:1	SHEET: 1 of 1	