符合"DLK环境管理物质技术标准"

符合USB3.0协会规范标准"

工程变更通知单 ECN(DCN) NO.	版本 REV	日期 DATE	说明 DESCRIPTION	变更 CHANGE	核准 APPRO.
KSECN17061	A	20171018	NEW RELEASE	——	——

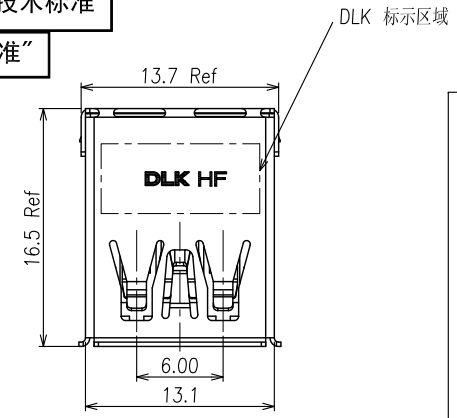

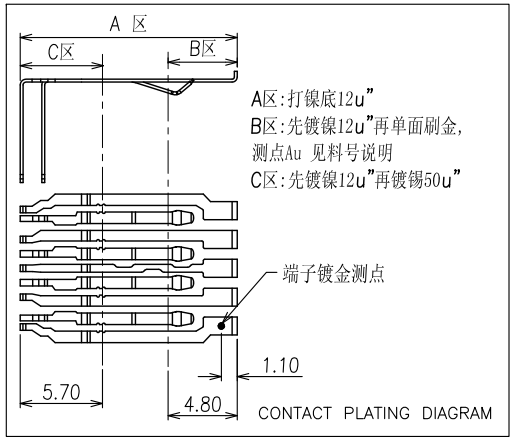

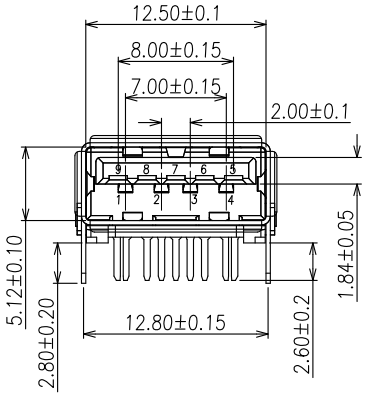

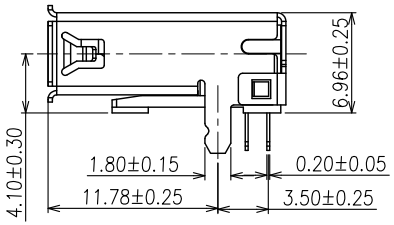

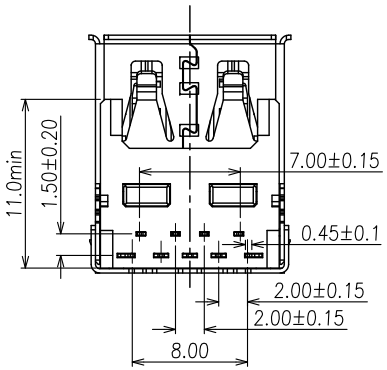

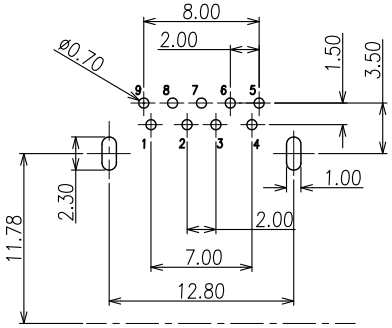

PCB LAYOUT(T1.0~1.6)TOP VIEW

U3A20 D-09 * ** R N2 J

① ② ③ ④ ⑤ ⑥ ⑦

① PRODUTION CODE（产品编码）:

U3A20: USB 3.0 A/F R/A 6.96H STD.

② CHARACTER（特征）:

D:DIP TYPE

③ POSITION（位数）:

09: 9PIN

④ COLOR OF HOUSING(本体颜色）:

L:BLUE (300C)

B:BLACK

⑤ PLATING OF CONTACT(端子电镀）:

M1 : Au 1U" AND MATTE TIN 50U" PLATED

M4 : Au 15U" AND MATTE TIN 50U" PLATED

M5 : Au 30U" AND MATTE TIN 50U" PLATED

⑥ PACKAGE(包装）:

Y :TRAY PACKAGE

R :T&R PACKAGE

⑦ PLATING OF SHELL(铁壳电镀）:

N2 :Ni plated

电镀规格:

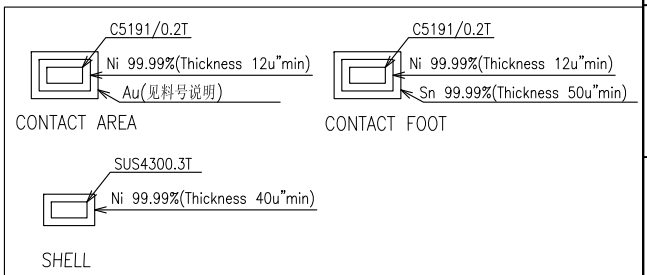

NO.	ITEM	Q'TY	DESCRIPTION	FINISH
4	COVER	1	LCP	UL94V-0
3	CONTACT	9	C5191	Au PLATED
2	SHELL	1	SUS430	Ni PLATED
1	HOUSING	1	LCP	UL94V-0

GENERAL TOLERANCE UNLESS OTHERWISE NOTED	
Angle	±1°
X.	±0.30
.X	±0.25
.XX	±0.15
.XXX	±0.05
A4	

德力康电子科技有限公司

DLK DELIKANG ELECTRONICS TECHNOLOGY CO.,LTD

C	名称 TITLE:	USB 3.0 A/F R/A 6.96H STD.			
档案名称 FILE NAME.	C-U3A20-00-0J		料号 PART NO:	U3A20D-09XMXRN2J	
DRAWING	王永辉	CHECKED	——	APPROVED	严成旺
UNIT:	mm	SCALE	1:1	SHEET: 1 of 1	